DOOSAN RANGE

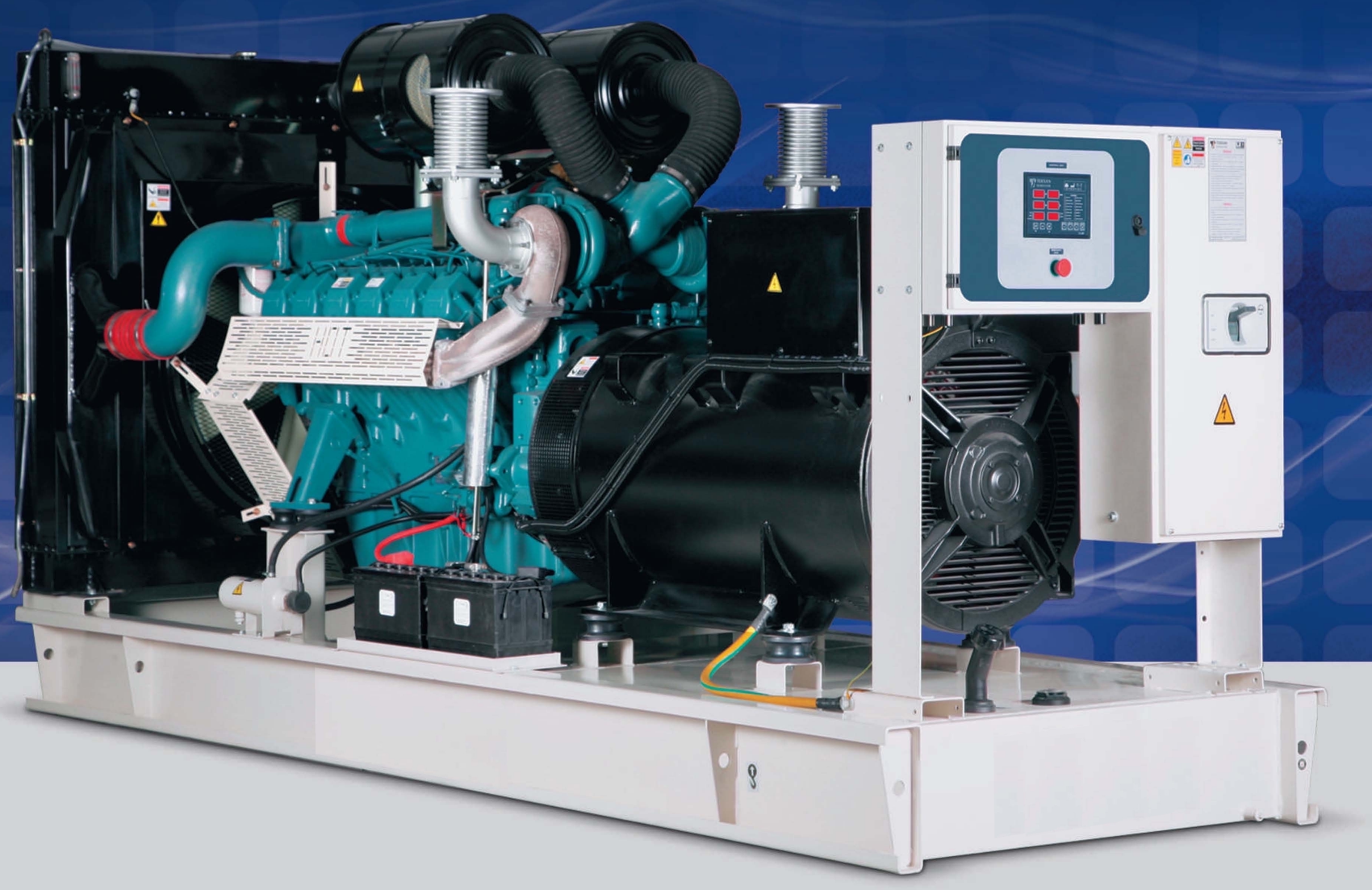

Standard Equipments

Engine:
Water-cooled, 4-stroke, heavy industry type diesel engines with fuel consumption efficiency, Built to comply with ISO 8528-2, ISO 3046, BS5514 and DIN6271-3.

Alternator:
Brushless, single bearing, self-exciting, Class H insulated alternator for optimum performance in tropical environment with automatic voltage regulator. Compliant with IEC 60034-1; CEI EN 60034-1; BS 4999-5000; VDE 0530, NF EN 60034-1; OVE EN 60034; NEMA MG 1.22; AS 1359; CAS C 22.2.

Control Panel:
Standard control panels used in AFA ***TS*** Generator Sets, provide comfort and reliability with all its indicators. Special control panels are designed according to the customer request.

Baseframe:
Vibration level is decreased to the standart levels that are revealed in ISO 8528-9 by anti-vibration mountings on the baseframe.

Fuel Tank:
Fuel tank is located into baseframe for genset models between 9-715 kVA. Free stand alone type fuel tank is standard above 715 kVA.

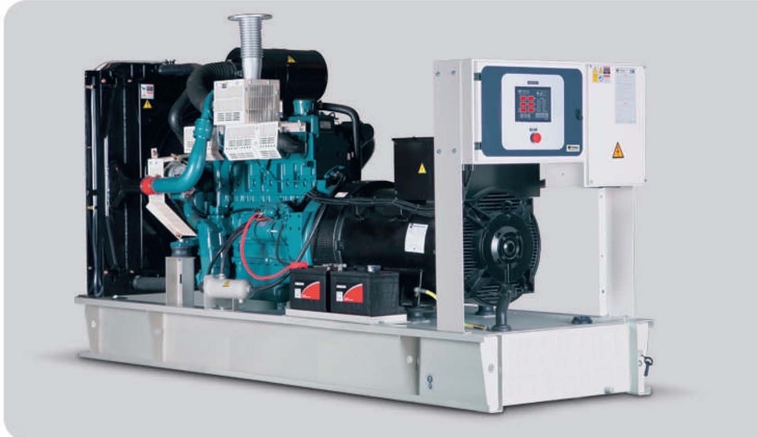

Glass window is optional.

Optional Features:

- Auto Transfer Switch systems
- Sound Proof Canopy
- Synchronization
- Remote Radiator
- Drain Oil Pump
- Trailer, complete with mudguards, lights, over-run and parking brakes
- Auxiliary Fuel Tank with Automatic Feed
- Special type Silencer

Deliver POWER to the world

DOOSAN RANGE

Watercooled **400 V - 3 phase 50 Hz 1500 rpm**

GEN-SET MODEL	ENGINE	STANDBY POWER		PRIME POWER		ENGINE MODEL	CYL	ASP	DIMENSIONS (mm)			CANOPIED DIMENSIONS (mm)			WEIGHT (kg)	CANOPIED WEIGHT (kg)
		kVA	kW	kVA	kW				W	L	H	W	L	H		
TJ180DW	DOOSAN	180	144	165	132	P086TI	6L	TCA	950	3000	1530	1200	3900	1950	1715	2400
TJ205DW	DOOSAN	205	164	185	148	P086TI	6L	TCA	950	3000	1530	1200	3900	1950	1765	2460
TJ235DW	DOOSAN	232	186	206	165	P086TI	6L	TCA	950	3000	1530	1200	3900	1950	1810	2510
TJ275DW	DOOSAN	275	220	250	200	P126TI-II	6L	TCA	1000	3000	1565	1300	3950	1950	2140	2820
TJ330DW	DOOSAN	330	264	300	240	P126TI-II	6L	TCA	1000	3000	1565	1300	3950	1950	2300	2940
TJ385DW	DOOSAN	385	308	350	280	P158LE	8V	TCA	1300	3200	1870	1650	4500	2400	2880	3920
TJ450DW	DOOSAN	450	360	410	328	P158LE	8V	TCA	1300	3200	1870	1650	4500	2400	2920	4000
TJ490DW	DOOSAN	486	389	427	342	P158LE	8V	TCA	1300	3200	1870	1650	4500	2400	3060	4230
TJ520DW	DOOSAN	518	414	472	378	P158LE-S	8V	TCA	1300	3200	1870	1650	4500	2400	3165	4335
TJ560DW	DOOSAN	560	448	510	408	P180LE	10V	TCA	1300	3500	1870	1650	5000	2400	3630	4700
TJ600DW	DOOSAN	600	480	550	440	P180LE	10V	TCA	1300	3500	1870	1650	5000	2400	3802	4872
TJ680DW	DOOSAN	680	544	630	504	P222LE	12V	TCA	1300	3800	1920	1650	5000	2400	4170	4850
TJ715DW	DOOSAN	714	571	653	522	P222LE-S	12V	TCA	1300	3800	1920	1650	5000	2400	4342	5300

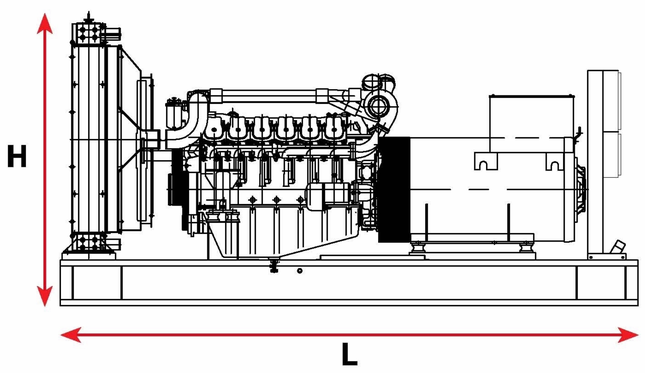

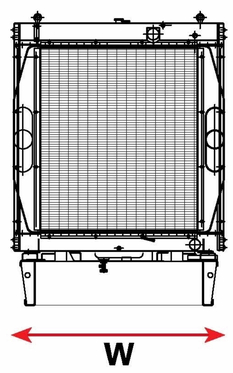

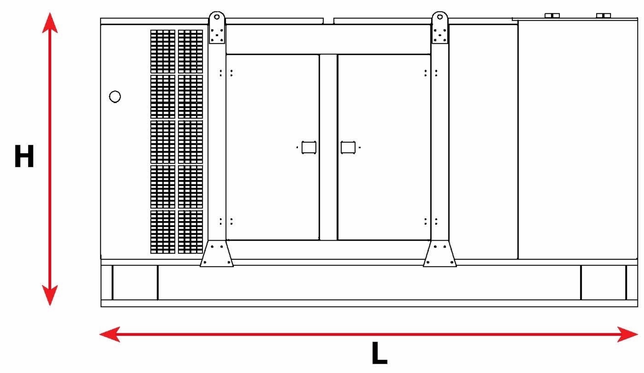

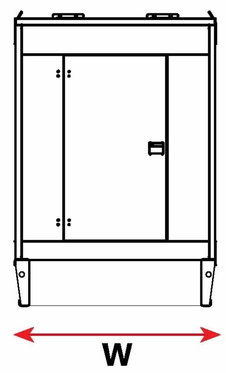

Standby Power : Standby Power is applicable for supplying emergency electric power for the duration of the utility power outage.

Prime Power : Prime power is the maximum power available at variable load for an unlimited number of hours. A 10% overload capacity is available.

NOTES: *All outputs stated are based at NTP in accordance with ISO8528, Please contact* AFA ***TS*** *to assess if any derate is required.*
All information given in this leaflet is intended for general purposes only. Due to the continuous improvement policy, AFA ***TS*** *reserves the right to amend details and specifications without notice and all information given is subject to the* AFA ***TS*** *current condition of sales.*

by 3Nokta